arXiv:quant-ph/0503189v3 16 Apr 2005

Generalizing Elitzur-Vaidman interaction free measurements

Adonai S. Sant'Anna Otávio Bueno

Department of Philosophy, University of South Carolina,
Columbia, SC, 29208
adonai@ufpr.br

Abstract

In the early 1990's A. Elitzur and L. Vaidman proposed an interaction free measurement (IFM) that allows researchers to find infinitely fragile objects without destroying them. But Elitzur-Vaidman IFM has been used only to determine the position of opaque objects. In this paper, we propose an extension of such a technique that allows measurement of classical electric and magnetic fields. Our main goal is to offer a framework for future investigations about the role of the measurement processes, expanding the physical properties that are measurable by means of IFM.

1 Introduction

Avshalom Elitzur and Lev Vaidman proposed a technique for an interaction free measurement (IFM) that allows researchers to find infinitely fragile objects without destroying them [1]. Some experimental demonstrations of this prediction have been obtained [2, 3]. For a recent review on the theoretical and experimental aspects of the IFM proposed by Elitzur and Vaidman, see [4].

Nevertheless, Elitzur-Vaidman IFM has been used only to determine the position of non-transparent objects. The original scheme is very simple. It is based on a Mach-Zehnder interferometer (see FIG. 1). Single photons are

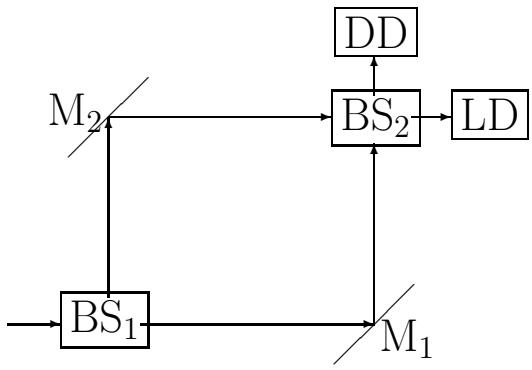

Figure 1: Mach-Zehnder interferometer.

emitted to the first beam splitter (BS_1) with a transmission coefficient 1/2. Next, the transmitted and reflected parts of the photon wave are reflected by mirrors M_1 and M_2, respectively. These reflected waves are reunited at the beam splitter BS_2, whose transmission coefficient is 1/2 as well. Two photon detectors, LD (light detector) and DD (dark detector), are positioned according to FIG. 1. The geometric arrangement is made in such a way that all photons are detected at LD and no photon is detected at DD, due to the self-interference of photons.

If any opaque object – like, for example, an infinitely fragile object that explodes when it is hit by any photon – is put on the way, say, between BS_1 and M_2, then there is no interference phenomenon. In this case, there is a 25% chance that DD detects a single photon sent through the interferometer. If a single photon is detected at DD after it was sent to the interferometer, then we can know for sure that there is something inside the interferometer. This is called an interaction free measurement in the sense that there is a 25% probability of knowing that there is in fact a photon-sensitive bomb inside the interferometer without exploding it. The fact that that bomb is found in a region of space without exploding it is evidence that there was no interaction between the photon detected at DD and the bomb. Obviously, if a photon is detected at LD, we know nothing at all about any object inside the interferometer. Besides, there is still a 50% chance of any single photon emitted to BS_1 be reflected and hit the bomb. In this case, we find the bomb with an interaction measurement, since it actually explodes.

In [4] Vaidman makes a very clear review of the meaning of the term "IFM". In [2] the authors demonstrate this technique in laboratory and still

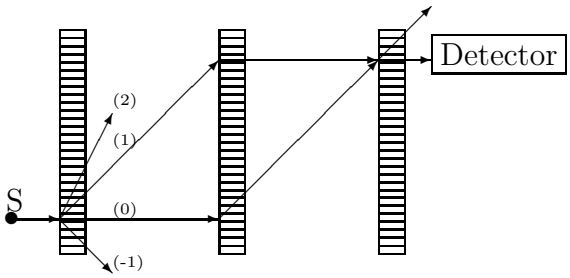

Figure 2: Three-grating Mach-Zehnder interferometer.

make an improvement to increase the efficiency of the scheme, using a discrete form of the quantum Zeno effect.

In this paper, we propose an extension of such a technique allowing researchers to measure electric and magnetic fields generated by macroscopic sources. In principle, even gravitational fields are measurable by an analogous experiment. One of the main differences between Elitzur-Vaidman proposal and ours is the use of matter waves instead of photon waves.

We believe that Elitzur-Vaidman's approach as well as the *Gedanken* experiments we propose in this paper are an important part of a more comprehensive understanding of the nature of measurement processes. But to this effect, it is important to determine the physical properties that are measurable by IFM, and those that are not.

2 Matter waves

There is no trivial extension of the optical elements of the Mach-Zehnder interferometer for matter waves like neutrons, electrons, atoms, and molecules. This is due to the fact that there is no such thing as mirrors and beam splitters for massive particles. In this case, the apparatus that has the best similarity to a Mach-Zehnder interferometer is the three-grating Mach-Zehnder interferometer, which is described in FIG. 2.

The optical elements of the Mach-Zehnder interferometer are all replaced by either crystals or nanofabricated diffraction membranes [5] or even laser standing waves [6]. The idea is to consider diffraction instead of beam split-

ting and reflection.

A collimated matter wave is emitted from a source S, according to FIG. 2. When this wave hits the first grating, the beam is diffracted in several diverging orders, where the primary ones are -1, 0, and 1. The 0th and the 1st order beams are diffracted through the second grating. The second grating diffracts a portion of each of the two incoming beams towards each other. Such diffracted beams, which are the 1st and the -1st orders of the two incident beams, respectively, overlap at the third grating. A resulting beam is then measured by a detector, which can be, for example, a wire that is much wider than a grating period. In other words, the first and the third grating play the role of the beam splitters in the traditional Mach-Zehnder interferometer, while the second grating plays the role of the two mirrors (FIG. 1).

One of the fundamental aspects of the IFM proposed by Elitzur and Vaidman is the fact that photons are emitted one by one. Matter waves interferometry in many cases is not performed with single particles. One rare exception is the electron interferometry with single electrons performed by Akira Tonomura [7]. Nevertheless, such an interferometry is accomplished in a two-slit type experiment, which is not geometrically equivalent to a Mach-Zehnder interferometer. In our *Gedanken* experiment proposed in the next section, it is fundamental that we have a certain distance between two primary paths of a diffracted beam, much bigger than the usual in a two-slit experiment.

There has been a remarkable improvement in the technology of matter waves interferometry. But some advances are still needed for single particle interferometers. One of the difficulties for this kind of technology is a lack of suitable diffraction elements for manipulating coherent atomic and molecular de Broglie waves. But we hope that our main ideas here will be testable in the future, mainly by means of the improvement of waves matter interferometry.

3 *Gedanken* experiments

Consider a three-grating Mach-Zehnder interferometer with a macroscopic source C of classical fields in the vicinity of the interferometer, which is illustrated in FIG. 3.

Suppose that the other source S is capable of emitting coherent single

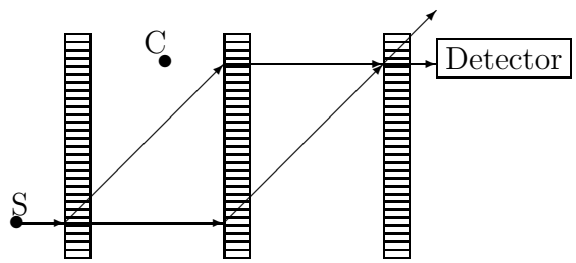

Figure 3: Our proposed *Gedanken* experiment with the source C of classical fields.

particles, and that the detector that is put after the third grating is capable of detecting these single particles.

We can put the third grating in a position where we expect no particles at all in the detector, due to the destructive effect of the interference fringes. Of course, this is an ideal situation for now, since there is no technology at the present that accomplishes this with point electric charges. We call this the "ideal condition".

Our idea is to measure the field that is emitted by a source C but without any interaction with the field. Our proposal works for a field that has enough intensity to disturb any particle of the diffracted beam of order 1 but weak enough to have its physical effects on the beam of order 0 completely neglected. If the source C is, e.g., a point electric charge, then the matter wave can be formed by either single electrons or single ions.

As is well known [8], any point charge submitted to an electromagnetic field will experience a quantum mechanical version of the Lorentz force, given by $\mathbf{F} = q[\mathbf{E}+\frac{1}{2c}(\mathbf{v}\times\mathbf{B}-\mathbf{B}\times\mathbf{v})]$, where c is the speed of light in the vacuum, q is the electric charge of the point charge, $\mathbf{v}$ is its speed and $\mathbf{E}$ and $\mathbf{B}$ are the electric and the magnetic components, respectively, of the electromagnetic field. We assume here that the point charge corresponds to the single particles emitted by S, while $\mathbf{E}$ and $\mathbf{B}$ may be generated by C.

Now we consider the particular case of an electric field, constant in time and emitted by C, strong enough to affect any particle in a given vicinity, but weak enough to be neglected outside this vicinity. Besides, this field exerts

an attractive force over particles emitted by S.

Let us suppose that we can control the distance of C to the expected path of the diffracted beam of order 1, in a way that C is always at a bigger distance from the expected path of the diffracted beam of order 0. Moreover, C has no movement during the IFM process.

Let us also suppose that the size of the second grating is quite limited in the following way: some attractive forces (into the direction of C) are supposed to bend the expected trajectory of a given particle at a certain speed, causing a deflection of an angle above a critical value φ_c. Any deflection angle above φ_c corresponds to a particle that never reaches the second grating, but it follows away from the interferometer, due to the appropriate limitation on the size of that grating.

So, if C is distant enough, then the effect of its generated electric field over the interferometer can be neglected and no particles are expected to be registered at the detector, due to the "ideal condition" mentioned above. But when we discretely move C (a movement during a time interval where no charge particle emitted by S is inside the interferometer) toward the expected path of the first beam of order 1, it will happen at a certain point that the field is strong enough to bend the trajectory of any charged particle of this beam. We propose a discrete movement of C to avoid accelerations that could generate a magnetic component associated to the electric field, during the time interval in which the particle is inside the interferometer. If this distance between C and the interferometer reaches a value that goes beyond a critical value that is responsible for a deflection angle greater than φ_c, then there is a non-null probability of registering single particles at the detector. This means that if any particle is registered at the detector, then we know that the electric field generated by C is above a critical value, which corresponds to a measurement of such an electric field within an error that depends on the discrete steps used to move C. It is clear that for each discrete position of C we must test the effects on the detector several times, until we are sure that no particle will be registered at the detector. We must repeat these tests to be sure that if no particle is detected, then this is due to the fact that the field generated by C is too weak to be measured.

On the other hand, if a particle is registered at the detector, then we know that there is an electric field whose value at a given point in the expected path of the diffracted beam of order 1 is greater than the critical value. Obviously, the interferometer needs to be calibrated for each measurement.

Since there is a field source in C, there is a potential difference between any two expected primary paths of the diffracted beam of charged particles emitted by S. We know that such a potential difference may be responsible for phase changes in the diffracted beams [9], which are measurable in the detector. So, if a particle is registered at the detector, then we need to be sure that such a detection is not due to a constructive interference phenomenon which may be explained by means of phase changes caused by any potential difference associated to the electric field that we intend to measure. So, we need to calibrate our measurement device to isolate any effect due to such a potential difference. After all, we are mainly interested on the electric field that is responsible for a Lorentz force.

We calibrate the interferometer as follows. For a given position of C, we put two metallic cages around the respective expected paths of the two main beams that travel from the first to the third grating. Any electric charge that travels through any one of these cages will be subject to a constant potential inside the cages, since inside the cages the potential is spatially uniform. So, there will be no Lorentz force on these point charges, although there is a potential difference between the expected paths that may affect the interference pattern of the point charges emitted by S. Next we adjust the position of the third grating until no particle emitted by S is registered at the detector. Now we are able to remove the cages in order to perform the interaction free measurement of the field emitted by C. Such a measurement is IFM in the sense described in the next paragraph.

If the trajectory of any electric charge may be bent causing a deflection above a critical angle φ_c, then this bending is caused by a Lorentz force with a null magnetic field. On the other hand, the point particle that is supposed to have its trajectory bent, generates an electric field by itself, which exerts a Lorentz force over C. We take it that if a particle is registered at the detector of the interferometer, then no force is necessarily registered over C. If C is a very fragile object that cannot be disturbed by any force, even caused by a test particle, then this is a good way to measure the field generated by C. This also is an indirect measurement of the Lorentz force without any counter-force involved. If any charged particle has its trajectory bent by the electric field generated by C (the case with interaction), then no particle is registered at the detector. But if a particle is registered at the detector, we know for sure that it had no interaction with the field. Moreover, the electric particle registered in the detector has no change in its kinetic energy, although

it registers the approximate value of an electric field (this value is above a critical value). This is the case even though we know that the Lorentz force due to electric fields always changes the velocity of electric charges under the influence of this field. The point is that we make a measurement of the field without any interaction with it. The measurement's value is determined by the distance from C to the expected path of the beam of order 1, which is responsible for the detection of the electric charge.

The efficiency of our interaction free measurement is below the 25% efficiency of the Elitzur-Vaidman proposal for IFM of position. Let us assume that p_1 is the probability that any charged particle follows from the first grating to the second one without any diffraction (diffraction of 0th order). If p_2 is the probability that any charged particle follows from the second grating to the third one with a 1st order diffraction, the efficiency of our IFM is $p_1 p_2$. Such efficiency depends on the physical features of the gratings. One possible way to increase this efficiency is by adapting the quantum Zeno effect introduced in [2] and [3].

An analogous framework could be used to measure magnetic fields. We could replace C by a source of magnetic fields, without any electric component. Despite the fact that magnetic fields do not change the kinetic energy of any electric charge in movement, they still exert a Lorentz force over such a point electric charge, causing a bending in its expected path. If the trajectory of any electric charge may be bent causing a deflection above a critical angle φ_c, then this bending is caused by a Lorentz force with a null electric field. On the other hand, the point particle that is supposed to have its trajectory bent generates an electric field by itself, which exerts a Lorentz force over C. In a similar way, as described above, if a particle is registered at the detector of the interferometer, then no force is registered over C. In this sense, this measurement is interaction free if the interferometer is obviously calibrated. The calibration is made in a way similar to the case of the electric field measurement. The goal of the calibration is to isolate our apparatus from any physical effect of phase change in the emitted coherent particles due to the vector potential associated to the magnetic field (Aharonov-Bohm effect) [9].

An analogous experiment could be performed to measure, at least in principle, the intensity of a gravitational field. This could be done with interferometry of either heavy atoms or molecules, where the mass of these particles is more relevant for gravitational effects. Neutrons interferometry could be performed as well. Nevertheless, we recognize that any conclusion

about a true interaction free nature of a measurement of this kind is not an easy task.

Furthermore, technical difficulties are obviously greater if the same strategy that uses photon interferometry is proposed to measure gravitational fields. As is well known gravitational fields are able to bend photon trajectories. The equation for describing the first order term of the deflection of light under the effect of a gravitational field caused by a mass M is given by $\Delta\phi = 4GM/(bc^2)$, where G is a constant equal to $6.67 \times 10^{-8} cm^3 g^{-1} s^{-2}$, b is an impact parameter and c is a constant equal to $3.00 \times 10^{10} cm\, s^{-1}$ [10]. Suppose we want to detect a deflection angle of 10^{-9} (a deflection of one nanometer to every one meter of trajectory) in a photon trajectory that grazes the surface of a massive sphere of, e.g., Iridium (one of the densest elements). In this case, the sphere would need to have a radius of approximately 18,900 km. This is obviously an unrealistic situation, although it is conceptually sound.

4 Conclusion

We gave the general framework of an IFM of some classical fields, with special emphasis on the case of electric fields. In this sense, we are extending the original Elitzur-Vaidman IFM, which was designed to measure the position of an opaque object without any interaction with it. Furthermore, we also show the advantages that IFM with matter waves has with respect to the original scheme proposed by Elitzur and Vaidman as well as some of the current limitations of IFM in the measurement of gravitational fields.

5 Acknowledgements

We are grateful to Osvaldo Pessoa, Jr. and Jose C. Martinez for helpful electronic discussions. This work was partially supported by CAPES (Brazilian government agency) and by the National Science Foundation (NSF 01-157, NIRT grant).

References

[1] A. C. Elitzur, and L. Vaidman, *Found. Phys.* **23** 987 (1993).

[2] P. Kwiat, H. Weinfurter, T. Herzog, A. Zeilinger, and M. A. Kasevich, *Phys. Rev. Lett.* **74** 4763 (1995).

[3] P. G. Kwiat, A. G. White, J. R. Mitchell, O. Nairz, G. Weihs, H. Weinfurter, A. Zeilinger, *Phys. Rev. Lett.* **83** 4725 (1999).

[4] L. Vaidman, *Found. Phys.* **33** 491 (2003).

[5] D. W. Keith, R. J. Soave, and M. J. Rooks, *J. Vac. Sci. Technol. B* **9** 2846 (1991).

[6] M. Büchner, R. Delhuille, A. Miffre, C. Robilliard, J. Vigué, C. Champenois, *Phys. Rev. A* **68** 013607 (2003).

[7] A. Tonomura, *Physics World* **16** 20 (2003).

[8] A. N. Matveyev, *Principles of Electrodynamics* (Chapman & Hall, London, 1966).

[9] J. J. Sakurai, *Modern Quantum Mechanics* (Addison-Wesley, Reading, 1994).

[10] R. Wald, *General Relativity* (University of Chicago Press, Chicago, 1984).